QuickDESIGN - 36 KR - SAAMI

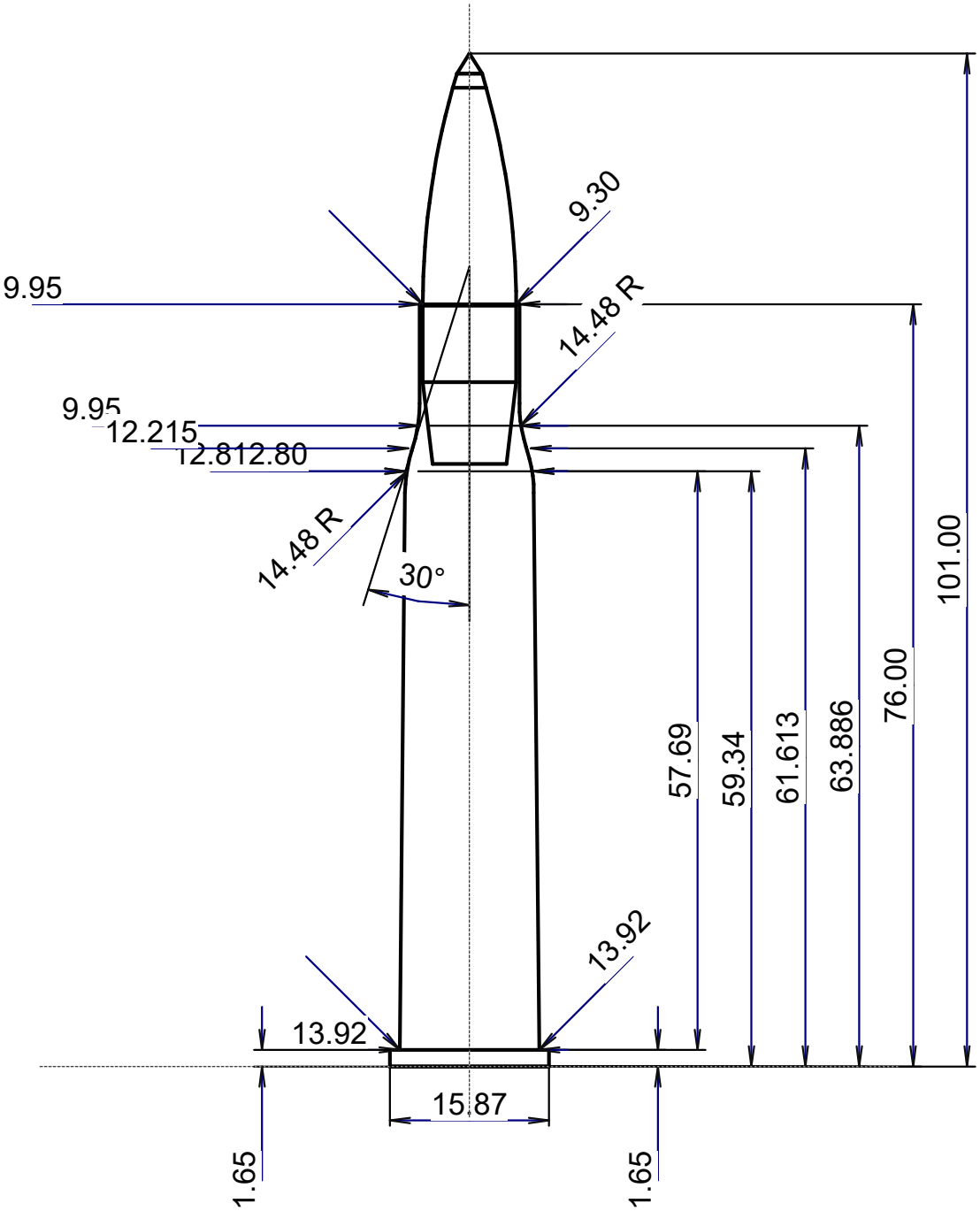

Scale 1.5:1